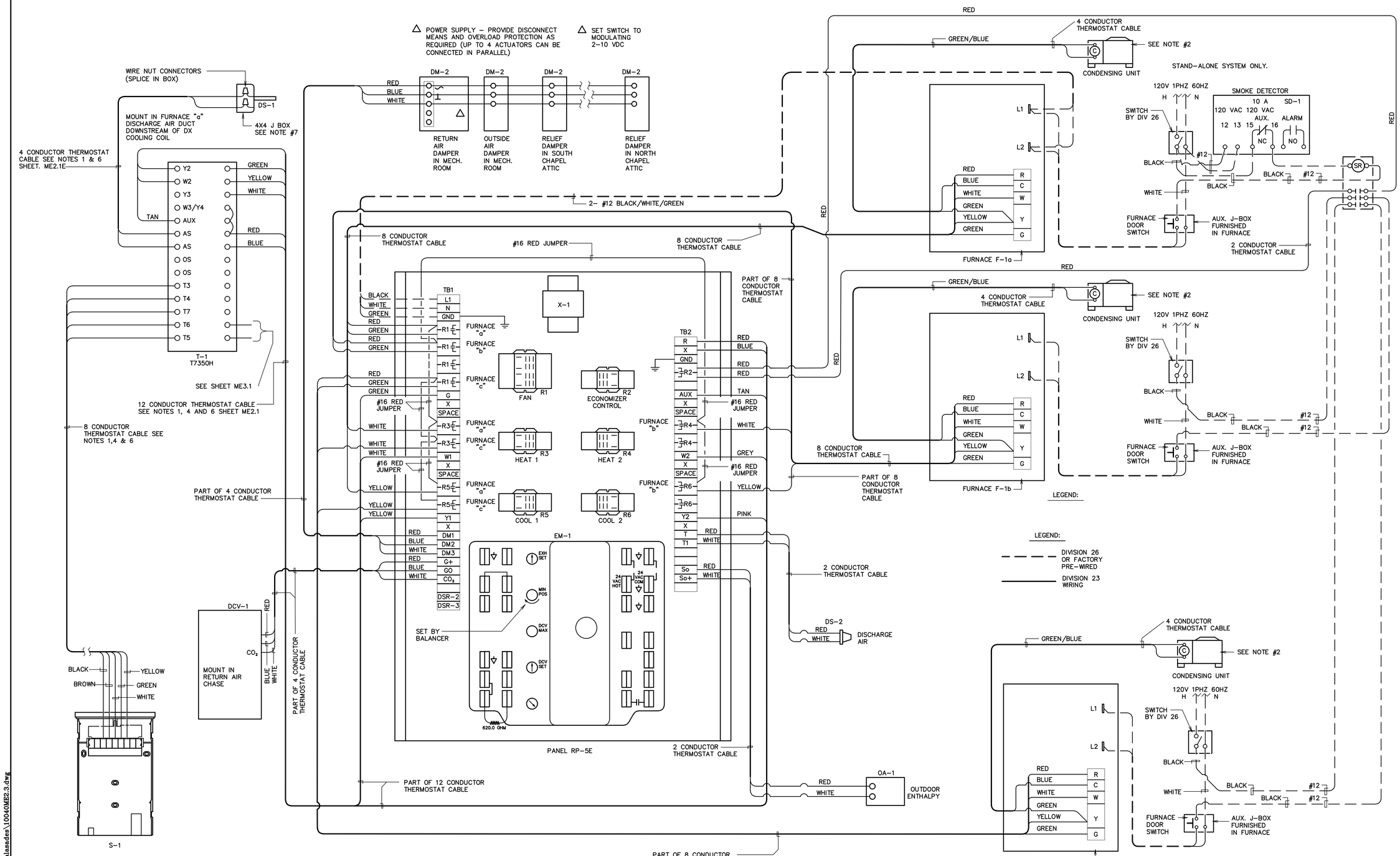

WIRING DIAGRAM

CHAPEL FURNACE SYSTEM (F–1a, F–1b & F–1c)

ORIGINAL DRAWING SIGNED BY: DWAYNE C. SUDWEEKS
DATE ORIGINAL SIGNED: July 7, 2010
ORIGINAL ON FILE AT ENGINEERED SYSTEMS ASSOCIATES
315 WEST CENTER, POCATELLO, IDAHO 83204

PROFESSIONAL ENGINEER REGISTERED 5762 STATE OF IDAHO DWAYNE C. SUDWEEKS

ESA ENGINEERED SYSTEMS ASSOCIATES
315 WEST CENTER
POCATELLO, IDAHO
83204
PHONE: (208) 233–0501
FAX: (208) 233–0529

ESA JOB NUMBER: 10040

nbw architects p.a.
ARCHITECTURE/PLANNING/INTERIORS
SCOTT L NIELSON, A.I.A. KEVIN R BODILY, A.I.A. JAMES H WYATT, A.I.A.
990 JOHN ADAMS PARKWAY P.O. BOX 2212 - IDAHO FALLS, IDAHO 83402-2212
(P) 208-522-8779 (F) 208-522-8765 (E) nbw-architects.com

PROJECT: MODIFICATIONS TO: PALISADES WARD HVAC FA
RIRIE IDAHO STAKE

SHEET TITLE: ATC WIRING DIAGRAMS

REVISIONS

PROJECT NO. 1035-1508
DATE: JULY 2010
DRAWN BY: SDD
CHECKED BY: DCS

DRAWING NO.: ME2.3

7/7/2010 3:36:23 PM F:\10\10040 LDS Palasades\10040ME2.3.dwg