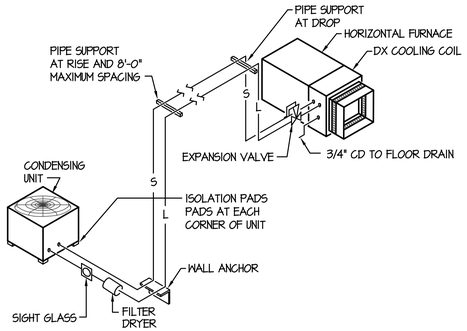

A REFRIGERANT PIPING DIAGRAM — NO SCALE

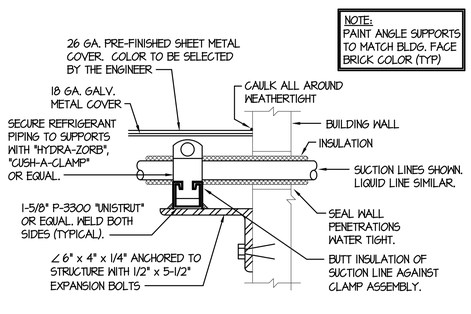

B REFRIGERANT PIPING SUPPORT AT WALL — NO SCALE

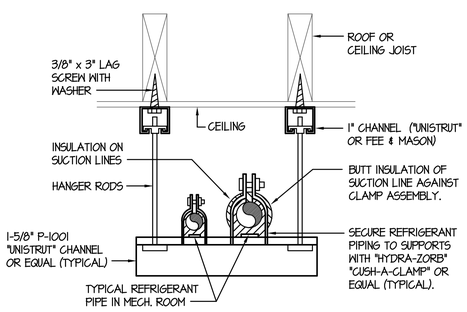

C SUSPENDED PIPE SUPPORT DETAIL — NO SCALE

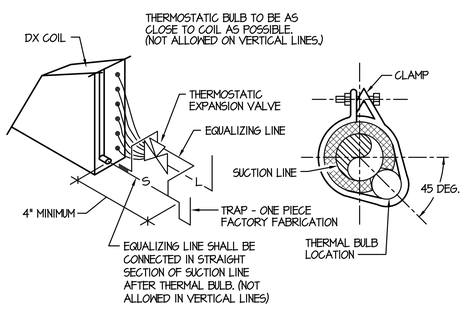

D REFRIGERANT COIL CONNECTION DETAIL — NO SCALE

MECHANICAL LEGEND

SYMBOL	DESCRIPTION	SYMBOL	DESCRIPTION
VTR	VENT THRU ROOF		SOIL OR WASTE PIPING
WCO	WALL CLEANOUT		VENT LINE PIPING
COTG	CLEANOUT TO GRADE		DOMESTIC COLD WATER PIPING
T	ELECTRONIC THERMOSTAT		DOMESTIC HOT WATER PIPING
1	PLAN NOTE		HOT WATER RECIRC. PIPING
		G	GAS PIPING
EQ 1	EQUIPMENT SYMBOL		PIPE DROP
			PIPE RISE
	REDUCED PRESSURE BACKFLOW PREVENTER	L	REFRIGERANT LIQUID LINE
		S	REFRIGERANT SUCTION LINE
	ELECTRIC ALARM GONG	RDL	ROOF DRAIN LEADER PIPING
		RDO	ROOF DRAIN OVERFLOW PIPING
	FIRE DEPARTMENT SIAMESE CONNECTION	CD	CONDENSATE DRAIN LINE
		SS	STEAM SUPPLY LINE
FAV	FIRE SPRINKLER RISER VALVE	CR	CONDENSATE RETURN LINE
		PCR	PUMPED COND. RETURN LINE
	PRESSURE REDUCING VALVE		GATE VALVE
			BALL VALVE
	LOCAL ATC PANEL		CHECK VALVE
			DRIP TRAP
	ELECTRIC WALL HEATER		SIDEWALL REGISTER SUPPLY OR RETURN AIR
HD	HAND DAMPER. PROVIDE REMOTE DAMPER IN ALL 'HARD' TYPE CEILINGS.		RETURN AIR OR EXHAUST GRILLE
FD	FIRE DAMPER AND ACCESS		CEILING DIFFUSER
M	MOTORIZED DAMPER		CEILING MOUNTED EXHAUST FAN
SF	SMOKE & FIRE DAMPER		ROOF TOP EXHAUST FAN
	ROUND BRANCH DUCT WITH HAND DAMPER		FURNACE OR FAN COIL UNIT
	RECTANGULAR SUPPLY AND RETURN AIR DUCT TAKE-OFF		CONDENSING UNIT
	TURNING VANES		INSULATED FLEXIBLE DUCT
	DUCT TRANSITION		ROUND SPIRAL DUCTWORK

HEAT PUMP UNIT SCHEDULE

SYM.	CFM	CHAR	M.C.A	HEATING BTU	HEATING KW	COOLING BTU	COOLING EER	REMARKS (1)
HP 1	330/240	208/230-1Φ	14.1	8500	2.5	9000	12.0	AMANA MODEL PTH-0936-25 WITH 2.5 KW ELECTRIC COIL.
HP 2	330/240	208/230-1Φ	14.1	8500	2.5	9000	12.0	AMANA MODEL PTH-0936-25 WITH 2.5 KW ELECTRIC COIL.
HP 3	330/240	208/230-1Φ	14.1	8500	2.5	9000	12.0	AMANA MODEL PTH-0936-25 WITH 2.5 KW ELECTRIC COIL.
HP 4	330/240	208/230-1Φ	14.1	8500	2.5	9000	12.0	AMANA MODEL PTH-0936-25 WITH 2.5 KW ELECTRIC COIL.
HP 5	330/240	208/230-1Φ	14.1	8500	2.5	9000	12.0	AMANA MODEL PTH-0936-25 WITH 2.5 KW ELECTRIC COIL.
HP 6	330/240	208/230-1Φ	14.1	8500	2.5	9000	12.0	AMANA MODEL PTH-0936-25 WITH 2.5 KW ELECTRIC COIL.
HP 7	330/240	208/230-1Φ	14.1	8500	2.5	9000	12.0	AMANA MODEL PTH-0936-25 WITH 2.5 KW ELECTRIC COIL.
HP 8	330/240	208/230-1Φ	14.1	8500	2.5	9000	12.0	AMANA MODEL PTH-0936-25 WITH 2.5 KW ELECTRIC COIL.
HP 9	330/240	208/230-1Φ	14.1	8500	2.5	9000	12.0	AMANA MODEL PTH-0936-25 WITH 2.5 KW ELECTRIC COIL.
HP 10	330/240	208/230-1Φ	14.1	8500	2.5	9000	12.0	AMANA MODEL PTH-0936-25 WITH 2.5 KW ELECTRIC COIL.
HP 11	330/240	208/230-1Φ	14.1	8500	2.5	9000	12.0	AMANA MODEL PTH-0936-25 WITH 2.5 KW ELECTRIC COIL.
HP 12	330/240	208/230-1Φ	14.1	8500	2.5	7600	12.0	AMANA MODEL PTH-0736-25 WITH 2.5 KW ELECTRIC COIL.
HP 13	330/240	208/230-1Φ	14.1	8500	2.5	7600	12.0	AMANA MODEL PTH-0736-25 WITH 2.5 KW ELECTRIC COIL.
HP 14	330/240	208/230-1Φ	14.1	8500	2.5	7600	12.0	AMANA MODEL PTH-0736-25 WITH 2.5 KW ELECTRIC COIL.
HP 15	330/240	208/230-1Φ	14.1	8500	2.5	7600	12.0	AMANA MODEL PTH-0736-25 WITH 2.5 KW ELECTRIC COIL.
HP 16	330/240	208/230-1Φ	14.1	8500	2.5	7600	12.0	AMANA MODEL PTH-0736-25 WITH 2.5 KW ELECTRIC COIL.
HP 17	330/240	208/230-1Φ	14.1	8500	2.5	7600	12.0	AMANA MODEL PTH-0736-25 WITH 2.5 KW ELECTRIC COIL.
HP 18	330/240	208/230-1Φ	14.1	8500	2.5	7600	12.0	AMANA MODEL PTH-0736-25 WITH 2.5 KW ELECTRIC COIL.

(1) UNIT TO BE COMPLETE WITH WALL SLEEVE AND ANODIZED ALUMINUM OUTDOOR GRILLE. (COLOR BY ARCHITECT) AND REMOTE (WALL MOUNTED) THERMOSTAT CONTROL

CONDENSING UNIT SCHEDULE

SYM.	BTU	EAT	CHAR.	MCA	WEIGHT	REFRIGERANT PIPING LIQUID	REFRIGERANT PIPING SUCTION	REMARKS
CU 1	54,000	95°F	208/230-1Φ	34.6	---	3/8"	1-1/8"	LENNOX MODEL 13ACX-060-208-2 WITH LOW AMBIENT 'HARD-START' KIT.
CU 2	54,000	95°F	208/230-1Φ	34.6	---	3/8"	1-1/8"	LENNOX MODEL 13ACX-060-208-2 WITH LOW AMBIENT 'HARD-START' KIT.

EXHAUST FAN SCHEDULE

SYM.	TYPE	C.F.M.	S.P.E.	WATTS	CHAR.	BTU	CONTROL	REMARKS
EF 1, EF 2	CEILING MOUNTED HEATER/FAN/LIGHT	70	.13"	1400	120/60/1	4437	SEE ELECT	BROAN MODEL 655 HEATER/FAN/LIGHT COMBO WITH BACK-DRAFT DAMPER AND 4"Φ DUCT TO SOFFIT GRILLE
EF 3, EF 4	CEILING MOUNTED HEATER/FAN/LIGHT	70	.13"	1400	120/60/1	4437	SEE ELECT	BROAN MODEL 655 HEATER/FAN/LIGHT COMBO WITH BACK-DRAFT DAMPER AND 4"Φ DUCT TO SOFFIT GRILLE
EF 5, EF 6	CEILING MOUNTED HEATER/FAN/LIGHT	70	.13"	1400	120/60/1	4437	SEE ELECT	BROAN MODEL 655 HEATER/FAN/LIGHT COMBO WITH BACK-DRAFT DAMPER AND 4"Φ DUCT TO SOFFIT GRILLE
EF 7, EF 8	CEILING MOUNTED HEATER/FAN/LIGHT	70	.13"	1400	120/60/1	4437	SEE ELECT	BROAN MODEL 655 HEATER/FAN/LIGHT COMBO WITH BACK-DRAFT DAMPER AND 4"Φ DUCT TO SOFFIT GRILLE
EF 9, EF 10	CEILING MOUNTED HEATER/FAN/LIGHT	70	.13"	1400	120/60/1	4437	SEE ELECT	BROAN MODEL 655 HEATER/FAN/LIGHT COMBO WITH BACK-DRAFT DAMPER AND 4"Φ DUCT TO SOFFIT GRILLE
EF 11, EF 12	CEILING MOUNTED HEATER/FAN/LIGHT	70	.13"	1400	120/60/1	4437	SEE ELECT	BROAN MODEL 655 HEATER/FAN/LIGHT COMBO WITH BACK-DRAFT DAMPER AND 4"Φ DUCT TO SOFFIT GRILLE
EF 13, EF 14	CEILING MOUNTED HEATER/FAN/LIGHT	70	.13"	1400	120/60/1	4437	SEE ELECT	BROAN MODEL 655 HEATER/FAN/LIGHT COMBO WITH BACK-DRAFT DAMPER AND 4"Φ DUCT TO SOFFIT GRILLE
EF 15, EF 16	CEILING MOUNTED HEATER/FAN/LIGHT	70	.13"	1400	120/60/1	4437	SEE ELECT	BROAN MODEL 655 HEATER/FAN/LIGHT COMBO WITH BACK-DRAFT DAMPER AND 4"Φ DUCT TO SOFFIT GRILLE
EF 17, EF 18	CEILING MOUNTED HEATER/FAN/LIGHT	70	.13"	1400	120/60/1	4437	SEE ELECT	BROAN MODEL 655 HEATER/FAN/LIGHT COMBO WITH BACK-DRAFT DAMPER AND 4"Φ DUCT TO SOFFIT GRILLE
EF 19	CEILING MOUNTED HEATER/FAN/LIGHT	70	.13"	1400	120/60/1	4437	SEE ELECT	BROAN MODEL 655 HEATER/FAN/LIGHT COMBO WITH BACK-DRAFT DAMPER AND 4"Φ DUCT TO SOFFIT GRILLE
EF 20	CEILING MOUNTED	100	.13"	100	120/60/1	---	5AW - 60 MINUTE TIMER SWITCH	BROAN MODEL L100 WITH BACK-DRAFT DAMPER AND 6"Φ DUCT TO SOFFIT GRILLE
EF 21	CEILING MOUNTED	100	.13"	100	120/60/1	---	5AW - 60 MINUTE TIMER SWITCH	BROAN MODEL L100 WITH BACK-DRAFT DAMPER AND 6"Φ DUCT TO SOFFIT GRILLE

FURNACE SCHEDULE

SYM.	TYPE	DESIGN CFM	F.A. CFM	$S.P._E$	H.P.	CHAR.	A.G.A. INPUT	A.G.A. OUTPUT	EAT	LAT	SUP	VENT	GAS TYPE	REMARKS
F 1	HORIZONTAL	1920	200	.50"	1	120/60/1	135,000	123,000	65°F	113°F	1/2"	(2) 2"Φ	NAT.	LENNOX MODEL G51MP-60D-135 WITH MATCHING DX COIL (LENNOX CH33-60D-2F)
F 2	HORIZONTAL	1920	200	.50"	1	120/60/1	135,000	123,000	65°F	113°F	1/2"	(2) 2"Φ	NAT.	LENNOX MODEL G51MP-60D-135 WITH MATCHING DX COIL (LENNOX CH33-60D-2F)

GRILLE AND REGISTER SCHEDULE

SYM.	SIZE	THROW	CFM	CONSTR.	FINISH	BRANCH DUCT	F.D.	O.B.	REMARKS
CD-1	9 x 9		50-200	STEEL	WHITE	8"Φ	NO	NO	PRICE MODEL MCD WITH BEVELED FRAME
SR-1	16 x 8	N.A.	200-600	STEEL	WHITE	10 x 8	NO	NO	PRICE MODEL 520D WITH NARROW FRAME
SG-1	12 x 12	N.A.	---	STEEL	WHITE	4"Φ	NO	NO	PRICE MODEL 535
RG-1	24 x 48	N.A.	1920	STEEL	WHITE	18 x 18	NO	NO	PRICE MODEL 535 WITH NARROW FRAME
TG-1	12 x 12	N.A.	50-400	STEEL	WHITE	12 x 8	NO	NO	PRICE MODEL 535 WITH NARROW FRAME

BOILER SCHEDULE

SYM.	TYPE	GROSS BTU INPUT	GROSS BTU OUTPUT	CHAR	AMPS	WORKING PRESSURE	FUEL TYPE	FLUE SIZE	GAS SIZE	PIPE SIZE	WEIGHT	REMARKS
B 1	SEALED COMBUSTION	399,000	367,000	120/60/1	10	30 psi	NAT.	(2) 4"Φ	1"	1-1/4"	300#	HTP MODEL EFT399 HIGH EFFICIENCY WALL HUNG BOILER. PROVIDE RELIEF VALVE.

CIRCULATING PUMP SCHEDULE

SYM.	TYPE	G.P.M.	HEAD	H.P.	CHAR	REMARKS	MANUFACTURER & MODEL NO.
CP 1	IN-LINE	20	20'	1/2	120/60/1	BOILER CIRCULATING	GRUNDFOS MODEL 40-80 'MAGNA 3' BOOSTER PUMP

PROFESSIONAL ENGINEER REGISTERED 5762 STATE OF IDAHO DWAYNE C. SUDWEEKS

Engineered Systems Associates
1355 EAST CENTER
POCATELLO, IDAHO 83201
PHONE: (208) 233-0501
FAX: (208) 233-0529
EMAIL: esa@engsystems.com
ESA JOB NUMBER: 17045

FFKR ARCHITECTS
730 Pacific Avenue · Salt Lake City, Utah 84104
© 801.521.6186 · FFKR.COM

HOMESTEAD BUILDING #3 ADDITION
407 W. 1ST N.
REXBURG ID
PERMIT SET 10/03/2017

ORIGINAL DRAWING SIGNED BY:
DWAYNE C. SUDWEEKS
ON
Oct 03, 2017
ORIGINAL ON FILE AT ENGINEERED SYSTEMS, ASSOC. 1355 EAST CENTER, POCATELLO, IDAHO 83201

Δ	DATE	REVISION

PROJECT NUMBER 170406

MECHANICAL SCHEDULES AND DETAILS

M-302

File: G:\17\17245 Homestead Bldg 3\17245-M302.dwg Oct 03, 2017 - 10:47am By: Mike