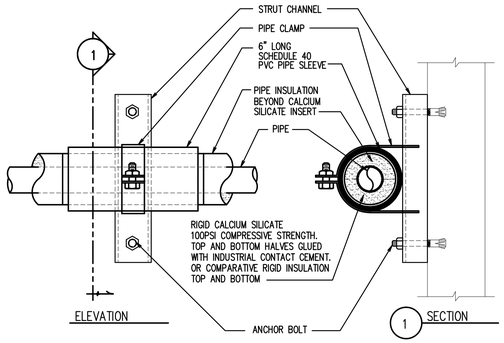

A WALL PIPE SUPPORT DETAIL
SCALE: NONE

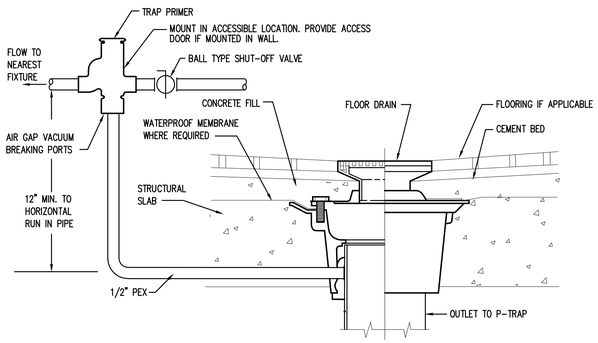

C TRAP PRIMER DETAIL
SCALE: NONE

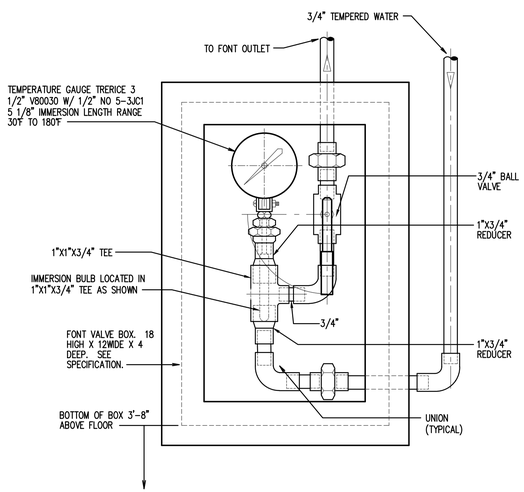

D FONT VALVE BOX DETAIL
SCALE: NONE

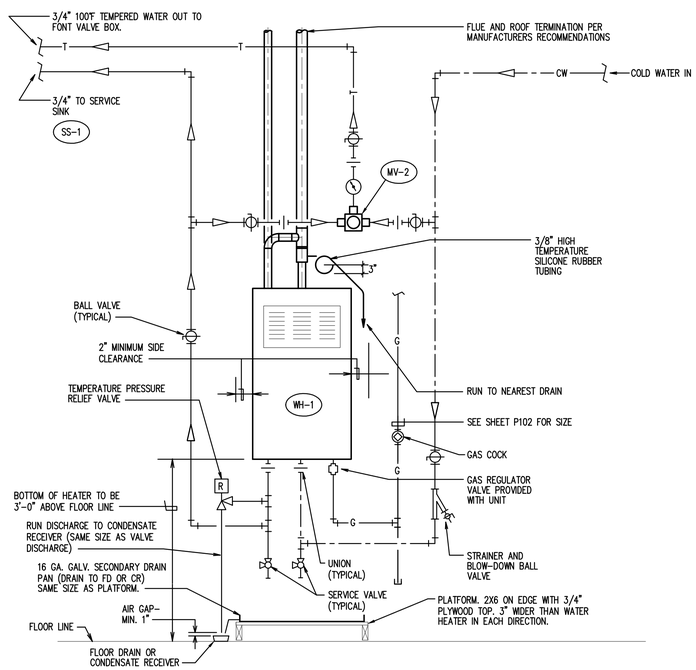

E TANKLESS WATER HEATER PIPING DETAIL
SCALE: NONE

ORIGINAL DRAWING SIGNED BY: DWAYNE C. SUDWEEKS
DATE ORIGINAL SIGNED: Mar 15, 2017
ORIGINAL ON FILE AT ENGINEERED SYSTEMS ASSOCIATES
1355 EAST CENTER, POCATELLO, IDAHO 83201

PROFESSIONAL ENGINEER REGISTERED 5762 STATE OF IDAHO DWAYNE C. SUDWEEKS

Engineered Systems Associates
1355 EAST CENTER
POCATELLO, IDAHO 83201
PHONE: (208) 233-0501
FAX: (208) 233-0529
EMAIL: esa@engsystems.com

ESA JOB NUMBER: 16083

Architect / Engineer:
nbwarchitects p.a.
ARCHITECTURE / PLANNING / INTERIORS
SCOTT L. NIELSON, A.I.A. KEVIN R. BODILY, A.I.A. JAMES H. WYATT, A.I.A.
990 JOHN ADAMS PARKWAY P.O. BOX 2212 - IDAHO FALLS, IDAHO 83402-2212
(P) 208-522-8779 (F) 208-522-8735 (ID) www.nbwarchitects.com

Stamp:

New Meetinghouse for:
Iona South Stake
Heritage 09TSC
4440 E. High Grove Road
Idaho Falls, ID 83401

Project for:
THE CHURCH OF JESUS CHRIST OF LATTER-DAY SAINTS

Mark	Date (D-M-Y)	Description

Project Number: 16065
Plan Series: HET-SDS-09-07
Property Number: 500-5990

Sheet Title: PLUMBING DETAILS

Sheet: P502

16083-P502.dwg - 03/15/2017 - 11:27 AM